7.5 Frequency-dependent Feedback

Below are examples of simple integrator and differentiator circuits which result from making the feedback path have frequency dependence, in these cases single-capacitor RC filters. It is also possible to modify non-inverting configurations in a similar way. For example, problem (3) on page 251 of the text asks about adding a "rolloff" capacitor in this way. Again, one would simply modify our derivations of the basic inverting and non-inverting gain formulae by the replacements $R \to Z$, as necessary.

7.5.1 Integrator

Using the golden rules for the circuit of Fig. 42, we have

$$\frac{v_{\text{in}} - v_-}{R} = \frac{v_{\text{in}}}{R} = i_{\text{in}} = i_{\text{out}} = -C\frac{d(v_{\text{out}} - v_-)}{dt} = -C\frac{dv_{\text{out}}}{dt}$$

So, solving for the output gives

$$v_{\text{out}} = -\frac{1}{RC}\int v_{\text{in}} dt \tag{38}$$

And for a single Fourier component ω, this gives for the gain

$$G(\omega) = -\frac{1}{\omega RC} \tag{39}$$

Therefore, to the extent that the golden rules hold, this circuit represents an *ideal integrator* and a low-pass filter. Because of the presence of the op-amp, this is an example of an *active filter*. In practice, one may need to supply a resistor in parallel with the capacitor to give a DC path for the feedback.

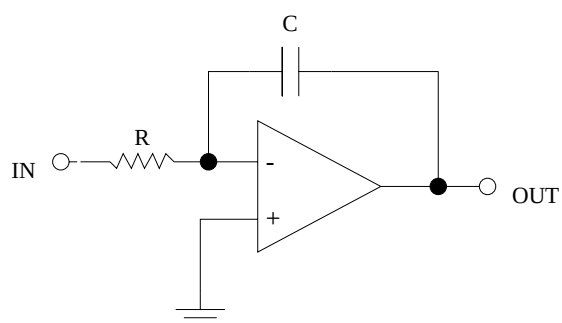

Figure 42: Op-amp integrator or low-pass filter.

7.5.2 Differentiator

The circuit of Fig. 43 can be analyzed in analogy to the integrator. We find the following:

$$v_{\text{out}} = -RC\,\frac{dv_{\text{in}}}{dt} \tag{40}$$

$$G(\omega) = -\omega RC \tag{41}$$

So this ideally represents a perfect differentiator and an active high-pass filter. In practice, one may need to provide a capacitor in parallel with the feedback resistor. (The gain cannot really increase with frequency indefinitely!)

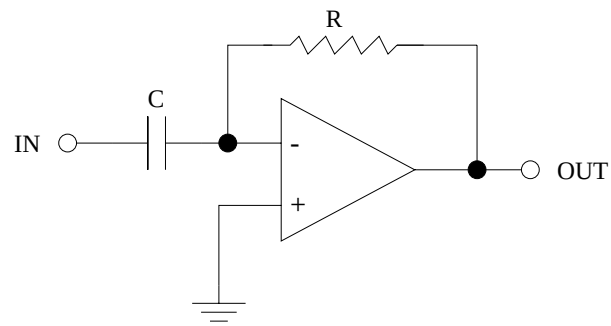

Figure 43: Op-amp differentiator or high-pass filter.

7.6 Negative Feedback

As we mentioned above, the first of our Golden Rules for op-amps required the use of negative feedback. We illustrated this with the two basic negative feedback configurations: the inverting and the non-inverting configurations. In this section we will discuss negative feedback in a very general way, followed by some examples illustrating how negative feedback can be used to improve performance.

7.6.1 Gain

Consider the rather abstract schematic of a negative feedback amplifier system shown in Fig. 44. The symbol $\otimes$ is meant to indicate that negative feedback is being added to the input. The op-amp device itself has intrinsic gain A. This is called the op-amp's *open-loop gain* since this is the gain the op-amp would have in the absence of the feedback loop. The quantity B is the fraction of the output which is fed back to the input. For example, for the non-inverting amplifier this is simply given by the feedback voltage divider: $B = R_1/(R_1 + R_2)$. The gain of the device is, as usual, $G = v_{\text{out}}/v_{\text{in}}$. G is often called the *closed-loop gain*. To complete the terminology, the product AB is called the *loop gain*.

As a result of the negative feedback, the voltage at the point labelled "a" in the figure is

$$v_a = v_{\text{in}} - Bv_{\text{out}}$$

The amplifier then applies its open-loop gain to this voltage to produce v_{out}:

$$v_{\text{out}} = Av_a = Av_{\text{in}} - ABv_{\text{out}}$$

Now we can solve for the closed-loop gain:

$$v_{\text{out}}/v_{\text{in}} \equiv G = \frac{A}{1 + AB} \tag{42}$$

Note that there is nothing in our derivation which precludes having B (or A) be a function of frequency.

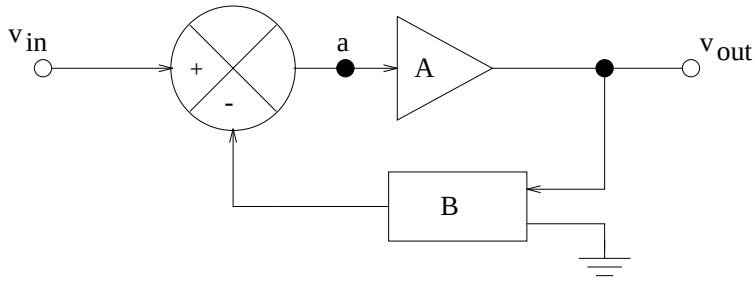

Figure 44: General negative feedback configuration.

7.6.2 Input and Output Impedance

We can now also calculate the effect that the closed-loop configuration has on the input and output impedance. The figure below is meant to clearly show the relationship between the definitions of input and output impedances and the other quantities of the circuit. The quantity R_i represents the open-loop input impedance of the op-amp, that is, the impedance the hardware had in the absence of any negative feedback loop. Similarly, R_o represents the Thevenin source (output) impedance of the open-loop device.

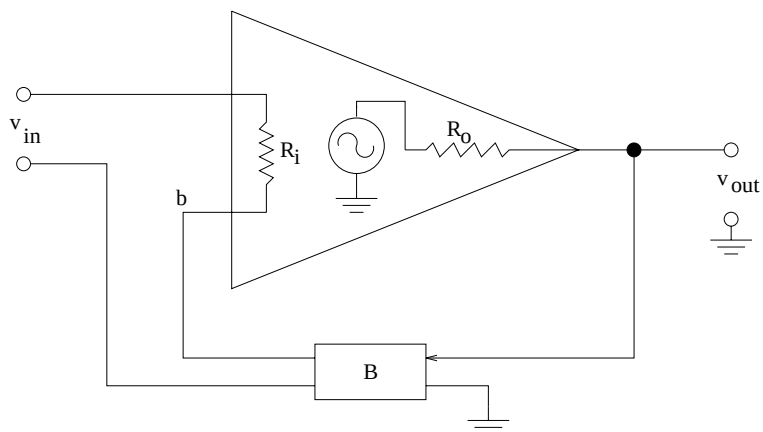

Figure 45: Schematic to illustrate the input and output impedance of a negative feedback configuration.

We start the calculation of Z_{in} with the definition $Z_{\text{in}} = v_{\text{in}}/i_{\text{in}}$. Let us calculate the current passing through R_i:

$$i_{\text{in}} = \frac{v_{\text{in}} - v_b}{R_i} = \frac{v_{\text{in}} - Bv_{\text{out}}}{R_i}$$

Substituting the result of Eqn. 42 gives

$$i_{\text{in}} = \frac{1}{R_i}\left[v_{\text{in}} - Bv_{\text{in}}\left(\frac{A}{1+AB}\right)\right]$$

Rearanging allows one to obtain

$$Z_{\text{in}} = v_{\text{in}}/i_{\text{in}} = R_i\left[1 + AB\right] \tag{43}$$

A similar procedure allows the calculation of $Z_{\text{out}} \equiv v_{\text{open}}/i_{\text{short}}$. We have $v_{\text{open}} = v_{\text{out}}$ and the shorted current is what gets when the load has zero input impedance. This means that all of the current from the amplifier goes into the load, leaving none for the feedback loop. Hence, $B = 0$ and

$$i_{\text{short}} = A\left(v_{\text{in}} - Bv_{\text{out}}\right)/R_o = Av_{\text{in}}/R_o = \frac{Av_{\text{out}}}{R_oG} = \left(\frac{Av_{\text{out}}}{R_o}\right)\left(\frac{1+AB}{A}\right) = \frac{v_{\text{out}}}{R_o}\left(1+AB\right)$$

This gives our result

$$Z_{\text{out}} = v_{\text{open}}/i_{\text{short}} = \frac{R_o}{1+AB} \tag{44}$$

Therefore, the efect of the closed loop circuit is to improve both input and output impedances by the identical loop-gain factor $1 + AB \approx AB$. So for a typical op-amp like a 741 with $A = 10^3$, $R_i = 1$ MΩ, and $R_o = 100\ \Omega$, then if we have a loop with $B = 0.1$ we get $Z_{\text{in}} = 100$ MΩ and $Z_{\text{out}} = 1\ \Omega$.

7.6.3 Examples of Negative Feedback Benefits

We just demonstrated that the input and output impedance of a device employing negative feedback are both improved by a factor $1 + AB \approx AB$, the device loop gain. Now we give a simple example of the gain equation Eqn. 42 in action.

An op-amp may typically have an open-loop gain A which varies by at least an order of magnitude over a useful range of frequency. Let $A_{\text{max}} = 10^4$ and $A_{\text{min}} = 10^3$, and let $B = 0.1$. We then calculate for the corresponding closed-loop gain extremes:

$$G_{\text{max}} = \frac{10^4}{1+10^3} \approx 10(1-10^{-3})$$

$$G_{\text{min}} = \frac{10^3}{1+10^2} \approx 10(1-10^{-2})$$

Hence, the factor of 10 open-loop gain variation has been reduced to a 1% variation. This is typical of negative feedback. It attenuates errors which appear within the feedback loop, either internal or external to the op-amp proper.

In general, the benefits of negative feedback go as the loop gain factor AB. For most op-amps, A is very large, starting at $> 10^5$ for $f < 100$ Hz. A large gain G can be achieved with large A and relatively small B, at the expense of somewhat poorer performance relative to a smaller gain, large B choice, which will tend to very good stability and error compensation properties. An extreme example of the latter choice is the "op-amp follower" circuit, consisting of a non-inverting amplifier (see Fig. 40) with $R_2 = 0$ and R_1 removed. In this case, $B = 1$, giving $G = A/(1 + A) \approx 1$.

Another interesting feature of negative feedback is one we discussed briefly in class. The qualitative statement is that any signal irregularity which is put into the feedback loop will, in the limit $B \to 1$, be taken out of the output. This reasoning is as follows. Imagine a small, steady signal v_s which is added within the feedback loop. This is returned to the output with the opposite sign after passing through the feedback loop. In the limit $B = 1$ the output and feedback are identical ($G = 1$) and the cancellation of v_s is complete. An example of this is that of placing a "push-pull" output stage to the op-amp output in order to boost output current. (See text Section 2.15.) The push-pull circuits, while boosting current, also exhibit "cross-over distortion", as we discussed in class and in the text. However, when the stage is placed within the op-amp negative feedback loop, this distortion can essentially be removed, at least when the loop gain AB is large.

7.7 Compensation in Op-amps

Recall that an RC filter introduces a phase shift between 0 and $\pi/2$. If one cascades these filters, the phase shifts can accumulate, producing at some frequency ω_π the possibility of a phase shift of $\pm\pi$. This is dangerous for op-amp circuits employing negative feedback, as a phase shift of π converts negative feedback to *positive* feedback. This in turn tends to compound circuit instabilities and can lead to oscillating circuits (as we do on purpose for the RC relaxation oscillator).

So it is perhaps easy to simply not include such phase shifts in the feedback loop. However, at high frequencies ($f \sim 1$ MHz or more), unintended stray capacitances can become significant. In fact, within the op-amp circuits themselves, this is almost impossible to eliminate. Most manufacturers of op-amps confront this issue by intentionally reducing the open-loop gain at high frequency. This is called *compensation*. It is carried out by bypassing one of the internal amplifier stages with a high-pass filter. The effect of this is illustrated in Fig. 46. It is a so-called "Bode plot", $\log_{10}(A)$ *vs* $\log_{10}(f)$, showing how the intrinsic gain of a compensated op-amp (like the 741 or 411) decreases with frequency much sooner than one without compensation. The goal is to achieve $A < 1$ at ω_π, which is typically at frequencies of 5 to 10 MHz. (One other piece of terminology: The frequency at which the op-amp open-loop gain, A, is unity, is called f_T, and gives a good indication of how fast the op-amp is.

Compensation accounts for why op-amps are not very fast devices: The contribution of the higher frequency Fourier terms are intentionally attenuated. However, for comparators, which we turn to next, negative feedback is not used. Hence, their speed is typically much greater.

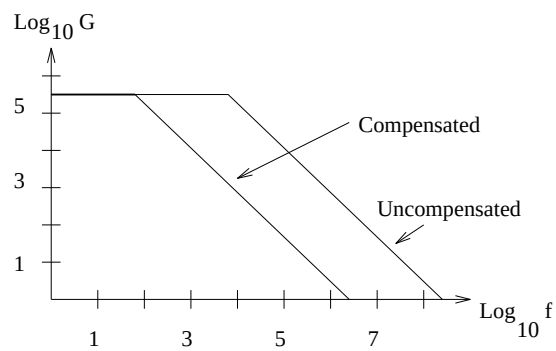

Figure 46: Bode plot showing effect of op-amp compensation.