8 Active Filters

Op-amps are very useful for producing active filters, which have better performance characteristics than LC or RC filters. The fall-off of a passive RC filter can be improved by chaining together multiple stages, but the "knee" or transition from the passband to the stopband will never be any sharper than for a single RC filter alone. Using active components, filter performance (particularly multiple stages) can be tuned to approach that of a perfect filter. In this section we will cover briefly some of the considerations of Active Filter design.

8.1 Simple Active Lo-Pass Filter

If we start with an op-amp integrator, and add a bypass resistor as shown previously in Figure 47, we can simply analyze this using our formalism of complex impedances as

$$\tilde{T}(\omega) = \tilde{V}_{\text{out}}/\tilde{V}_{\text{in}} = -Z_2/Z_1 = -\frac{1}{R_1}(1/R_2 + i\omega C)^{-1} = -\frac{R_2}{R_1}\frac{1}{(1 + i\omega R_2 C)} \tag{45}$$

This circuit gives both a voltage amplification, controlled by the ratio R_2/R_1, and a lo-pass RC filter with $\omega_{3dB} = 1/R_2C$.

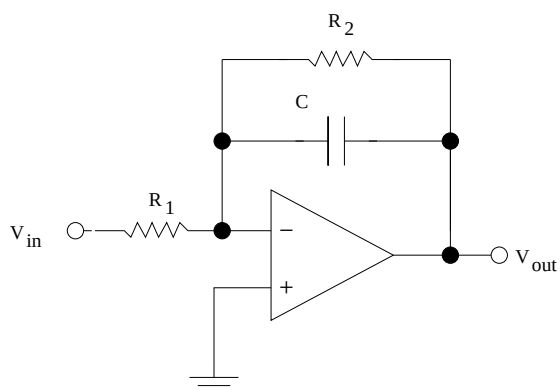

Figure 47: A simple active lo-pass filter.

8.2 Laplace notation

Filters are often analyzed by taking the Laplace transform of the filter response to an input step function voltage. While this analysis is beyond the scope of this class, we will borrow a couple of notational issues from this kind of analysis. The first is identifying the complex variable $s = i\omega$. Using this, we can re-write the transfer function for an RC lo-pass filter as $\tilde{T}(s) = 1/(1 + sRC)$.

In general, the response of any combination of linear filters and amplifiers can be written as the ratio of two polynomials in s:

$$\frac{a_0 + a_1 s + a_2 s^2 + ...}{b_0 + b_1 s + b_2 s^2 + ...}$$

which can be re-written by factoring into a number of *zeroes* and *poles* as

$$K\frac{(s+z_1)(s+z_2)...}{(s+p_1)(s+p_2)...}.$$

A "single pole" filter, like the one shown in Figure 47, has a transfer function with a single pole in the denominator. A fourth-order filter would have four factors in the denominator, possibly with different pole values, and in general a multi-pole filter of order n will have n-poles, and a frequency response which falls as $1/s^n$ or $n \times 6$ dB/octave.

When analyzing filter and amplifier circuits with feedback, the location of the poles in the complex plane can be used to analyze the stability of the device. A general rule, developed initially by Nyquist, is that any transfer function pole with a positive real component $Re[p_i] > 0$ will produce positive feedback (rather than negative feedback) and hence lead to an unstable or oscillating circuit.

8.3 Voltage Controlled Voltage Source

Figure 48 shows the general layout for a voltage controlled voltage source (VCVS), which is the main building block for general active filters. A simplified diagram, which removes the final voltage divider on the right by setting $K = 1$, is called the Sallen-Key filter. This circuit, which with this configuration is a low-pass filter, is essentially two RC filters cascaded together, with the base of the second bootstrapped to V_{out}. As we will see, the voltage divider providing some adjustable amount of feedback to the op-amp described by the parameter K allows us to tune the response function of this filter over a range of parameters.

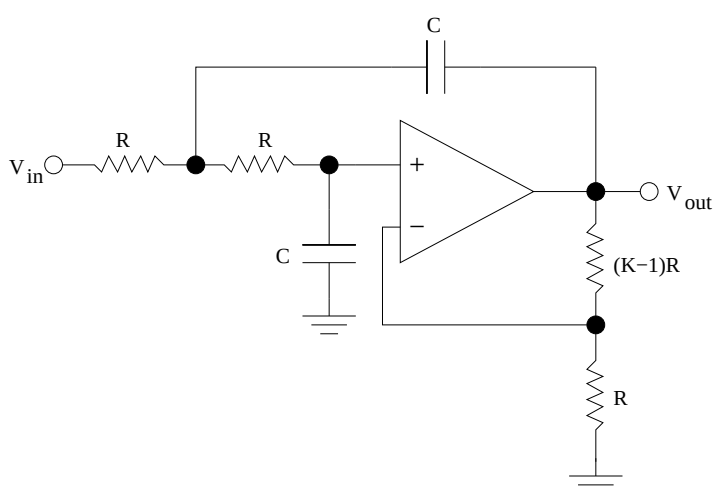

Figure 48: Voltage Controlled Voltage Source (VCVS) in lo-pass configuration.

We can analyze this circuit by considering the equivalent circuit shown in Figure 49. The op-amp fixes the voltage at the inverting input terminal labeled V_{out}/K by the first golden rule, and no current flows into this terminal by the second golden rule. Using KCL on the upper junction, we can relate $I_3 = I_1 + I_2$, where substituting in the complex impedances seen along those paths gives

$$\frac{V_{\text{out}}/K}{1/sC} = \frac{V_{\text{in}} - V_X}{R} + \frac{V_{\text{out}} - V_X}{1/sC}. \tag{46}$$

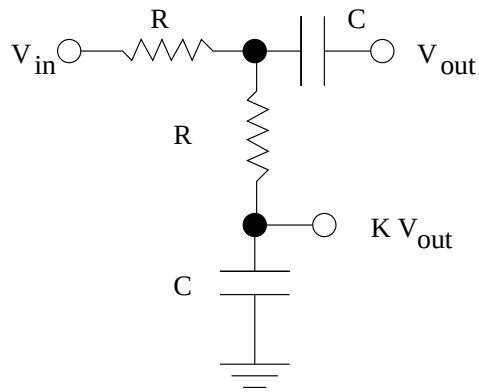

Figure 49: VCVS equivalent circuit.

Solving for V_{in} gives

$$V_{\text{in}} = sRC(\frac{1}{K} - 1)V_{\text{out}} + (1 + sRC)V_X \tag{47}$$

To find V_X, we simply need to add a voltage of I_3R to the inverting input voltage of V_{out}/K to get

$$V_X = (1 + sRC)\frac{V_{\text{out}}}{K}$$

Putting this all together we find:

$$V_{\text{in}} = sRC(\frac{1}{K} - 1)V_{\text{out}} + (1 + sRC)^2\frac{V_{\text{out}}}{K} \tag{48}$$

If we set $K = 1$, which represents the Sallen-Key circuit, the first term vanishes and we recover a normal second-order filter response of

$$\tilde{T}(s) = V_{\text{out}}/V_{\text{in}} = \frac{1}{(1 + sRC)^2}.$$

With K as an arbitrary parameter, however, we find that the transfer function works out to be

$$\tilde{T}(s) = \frac{K}{1 + sRC(3 - K) + s^2R^2C^2}, \tag{49}$$

so by adjusting K we can adjust the denominator and hence the frequency dependence of this filter.

Note that in general, the various values of R and C do not need to be the same, although typically each pair in a given 2nd-order filter will be matched. High performance filters will chain together several stages of 2nd-order active filters to produce a composite filter with 8 poles (or more) and very steep fall-off.

To convert the circuit in Figure 48 into a high-pass filter, it is only necessary to swap the positions of the two filter resistors with the two filter capacitors. A band-pass filter can similarly be created by just swapping just one of these.

8.4 Filter types

The VCVS with tuning parameter K can be used to construct a variety of named filter types, as described at length in the book. A specific named filter typically has some specific mathematical function for its transfer function with some useful property. These filter types can be constructed from the same VCVS circuit, however, by tuning K to give the desired mathematical properties.

We will briefly discuss three of these, the Bessel filter, Butterworth filter, and Chebyshev filter. In order, these correspond to increasing values of K, and also to increasingly sharp features at the knee between the passband and stopband, as shown in the figures in the book.

The Bessel filter, defined by a transfer function described by a Bessel polynomial, can be achieved with a value of $K = 1.27$. Since this is close to 1, this filter has a rather gradual knee, not so different from a passive RC or Sallen-Key filter with $K = 1$. The benefit of using a Bessel filter is the maximally-flat phase response of this filter. A square wave into a Bessel filter will still mostly look like a square wave on the output, as all frequencies have a similar phase shift until the filter is strongly attenuating.

The Butterworth filter is mathematically defined as a transfer function with maximally flat gain, which has the functional form of

$$G^2(\omega) = \frac{G_0^2}{1 - (\omega/\omega_c)^{2n}}$$

for an nth-order filter. For a second-order Butterworth filter, then, we need to choose a K such that the linear term in the denominator of the VCVS transfer function is zero. Remembering that the gain is given by $G^2 = |T(s)|^2$, we find this condition to be satisfied for a value $K = 3 = \sqrt{2} \approx 1.586$. The Butterworth is probably the most useful "all-around" filter, as it gives very flat frequency response in the passband and cuts off reasonably quickly in the stopband.

The Chebyshev filter has a transfer function based on a Chebyshev polynomial, and gives the fastest fall-off of the three filters described here. The voltage gain with frequency can cut-off quite quickly with a Chebyshev filter, but the price to pay for this performance is "ripples" or variations in the filter gain in the passband, were you would expect a flat response. The closer the filter cut-off comes to a perfect step-reponse, the larger these ripples become. For certain applications, particularly pass-band filters made from a low-pass and high-pass filter in combination, these ripples are irrelevant and the sharp falloff is desired. In this case a high-order Chebyshev can produce a very narrow bandpass filter approaching a pure delta function. In other cases were high fidelity across a wide bandwidth is necessary, a Butterworth would be more suitable.

It is worth pointing out that for all of these active filters, the critical filter frequency is not exactly the same as the 3db point defined earlier for RC filters. For the Butterworth filter, these are about the same, while the Chebyshev critical frequency is significantly different from the 3db point.