COIL DEVELOPMENT:
1. 886W, 115V
2. 18 GA NIK 80
3. 8 TPI @ 11.18" HEATED
4. 12" BRAIDED LEADS

TUBE DEVELOPMENT:
1. TUBE I.D 1.50"
2. TUBE O.D 2.30"
3. TUBE LENGTH 12.06"
4. TUBE MATERIAL MLP80 LOW FIRE CERAMIC OBE.
5. GROOVE TO 2.20" ROOT DIA.

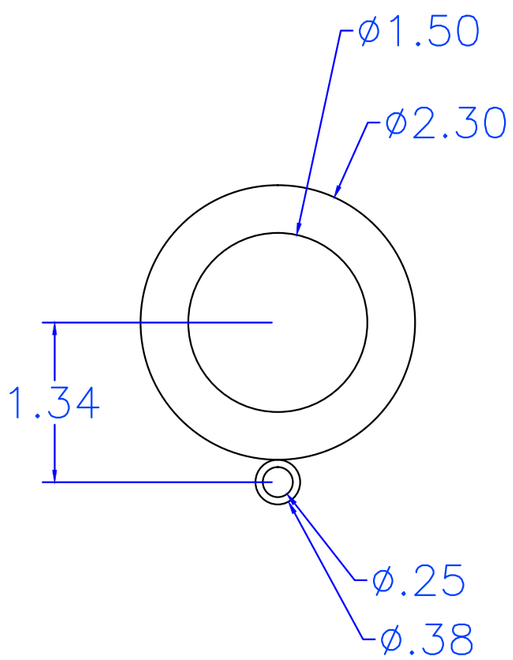

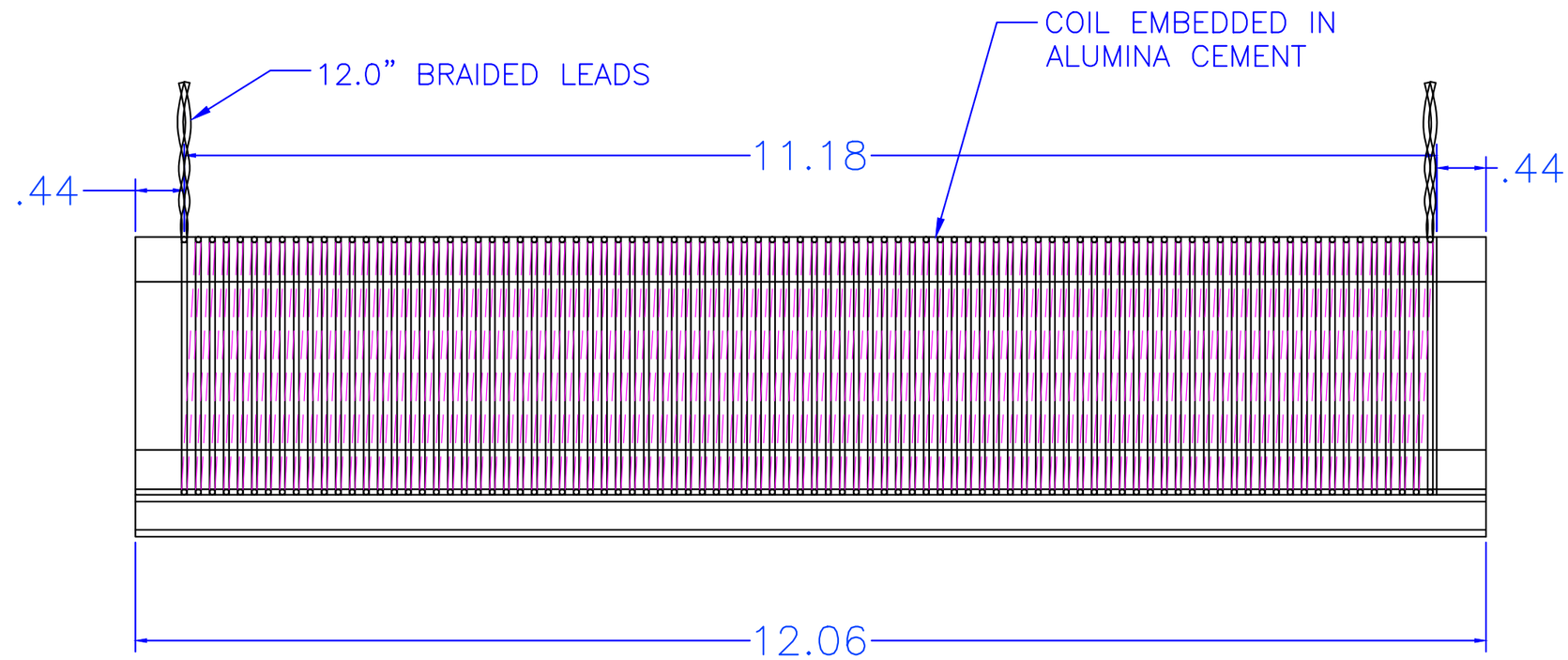

LOW FIRE MLP80 CERM. TUBE

1.25" ID X 2.30" OD X 12.06" LONG

MUST RUN CONTINUOUS GROOVE

REV	REVISION	DFTMN	DATE	REV	REVISION	DFTMN	DATE
REV	REVISION	DFTMN	DATE	REV	REVISION	DFTMN	DATE
				X	X X	XXX	00/00/00

LEGAL AGREEMENT OF DRAWING

"DESIGNS AND/OR INFORMATION SHOWN ON THIS DRAWING ARE PROPRIETARY. THE RECIPIENT AGREES NOT TO DISCLOSE OR REPRODUCE THIS INFORMATION IN PART OR IN WHOLE WITHOUT EXPRESS WRITTEN CONSENT OF THERMCRAFT INC."

APPROVAL		DATE
DRN.	JBL	03/18/14
CHK.		
APP'D		
APP'D		
CORPORATION/COMPANY		

PRODUCT TYPE	MACH. METAL PARTS	METAL FAB. ASSYS	CERAMIC FIBER PRODUCT	CAST CERAMIC PRODUCT
DECIMALS				
XX	+/-.01	+/-.06	+/-.09	+/-.12
DECIMALS				
XXX	+/-.005	+/-.062	+/-.080	+/-.093
ANGLES	+/- .05	+/- 2	+/- 3	+/- 3

REMOVE ALL BURRS
BREAK ALL CORNERS

UNLESS NOTED, DIMENSIONAL TOLERANCES ARE AS SHOWN

Thermcraft incorporated
P.O. Box 12037
3800 Overdale Road
Winston-Salem, N.C. 27107

MARSHALL FURNANCE ELEMENT
A-9112

JOB	PLOT SCALE	DRAWING NO.	REV	SHEET	OF
	NTS	A-9112		1-1	